Dry salting

Efficient dry salting of salmon

- Automatic and flexible salting
- Limited waste
- Suitable for various spices
- Heated tank for keeping the salt dry
- Easy to clean design

Dry salting for salmon fillets

Marel Salmon can offer you equipment for efficient and flexible dry salting & spicing of salmon fillets. This is an important process in order to get the optimum yield and the best conservation of the salmon before the smoking process. The Marel salt & spice dispensers are developed with consideration of the difficult conditions of a fish processing plant with a humid and wet enviroment. Keeping the salt/spice dry is essential in order to have an efficient process.

Marel's salt & spice dispensers are designed for dry salting/spicing of salmon fillets before storage on smoking grids. The machines can be used for salt, sugar/salt mixtures and various spices.

We have 2 different models of dispensers, suitable for various types of production methods. They are almost uniform in the design and construction, but they have 2 different kinds of activation systems of the dispenser.

- **CT 1403.25 operates with finger touch activation.**

- **CT 1403.30 operates with sensor activation.**

Advantages

With Marel's salt & spice dispensers extra handling of the fish is avoided. The salmon fillets are transported on an open wire belt, passing a number of nozzles, which carefully salt/spices the fillets. The surplus salt/spice can be collected in a bin under the machine.

The dispensers are equipped with a double wall tank with heated oil and an air tight lid to keep the salt dry by avoiding condensation.

View at the inside of the heated tank

CT 1403.25

CT 1403.30

Maximum flexibility

CT 1403.25

With the finger touch system the salt/spice is dosed on the fillets when the fillets touch the fingers. The salt/spice is dosed only on the fillets, and the dosing is adjusted to the thickness of every part of the fillet. This system is the most efficient when it comes to utilization of the salt/spice with a limited amount of waste. With the finger touch system it is possible to salt/spice only the thickest part of the fillets. The dispenser is easy to adjust in height to get the required quantity of salt/spice on the fillets.

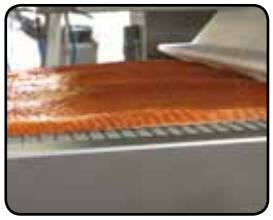

CT 1403.30

The other salt/spice dispenser is dosing the salt/spice when the fillets pass by a sensor next to the wire belt. The nozzles open in the full width of the lane, and an even amount of salt/spice is dosed all over the fillets. The surplus salt/spice can be collected in a bin under the wire belt.

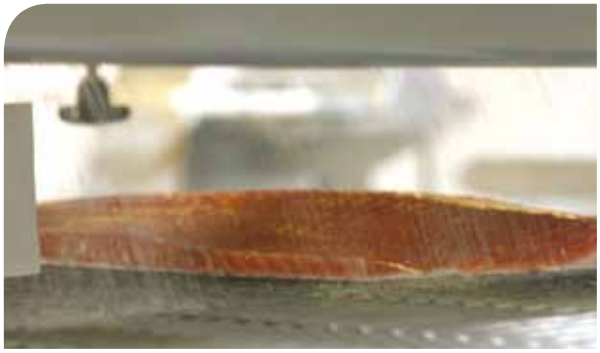

Easy-to-clean design

The dispensers are made in a strong stainless steel design with a smooth and easy-to-clean surface. All materials are FDA-approved and meet the strict hygiene demands in the industry. The cleaning is facilitated by an open design.

Solution for smoke trolleys

Marel salt & spice dispensers are made as stand-alone units for smaller productions, but they can enter as a natural part of a Marel Salmon processing line. We can supply you with additional conveyors, and a trolley lift system for an easy loading of the fillets on to smoke trolleys.

After sales service

Any purchase of a Marel salt/spice dispenser includes the offer of installation, to make sure you can quickly and smoothly get your production line up and running. Our skilled service engineers will also provide your operators with thorough training in operating, cleaning and maintaining the equipment.

Our service department is always available to provide any troubleshooting and assistance you may need. This includes sending a service engineer to deal with any technical issues related to your Marel dry salting set-up.

A Marel service agreement also gives you easy access to regular service support. Our service engineer will visit you to check the equipment thoroughly and make sure it is properly set up and fine-tuned for efficient, reliable production, changing any parts if necessary.

Whenever you need any wearing parts, spares or replacement parts, we dispatch these straight to you by courier service, to help ensure maximum uptime.

Technical data

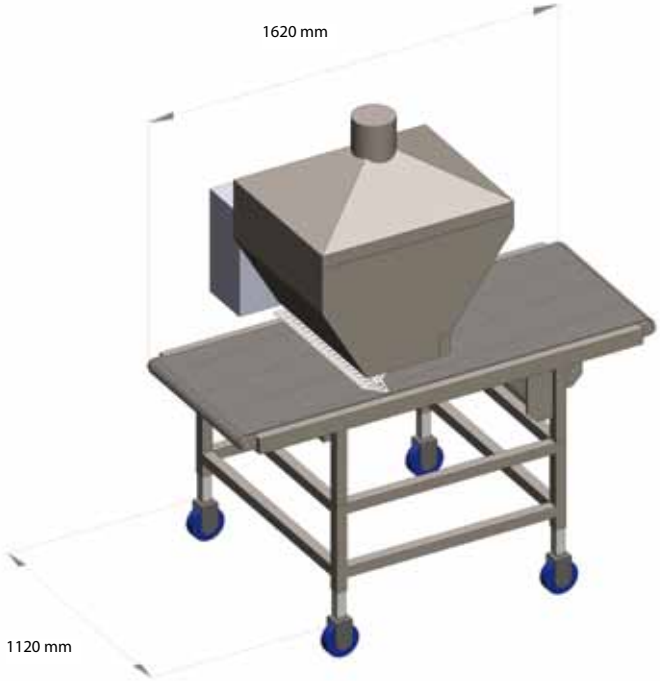

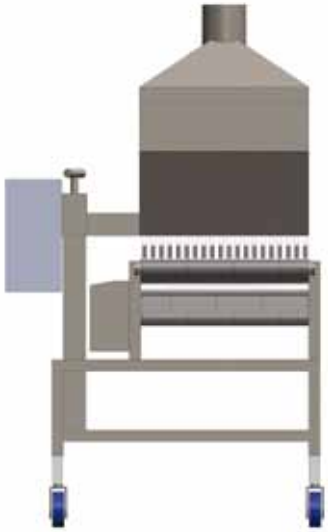

SPECIFICATIONS

Capacity:	Up to 40 fillets/minute, fillets between 0.5 kg to app. 3-4 kg
Max fillet height:	50 mm
Electricity:	3x 400V + N + PE / 3x 220V + PE
Power consumption:	0,65 kW
Tank capacity:	Approx 50 kg
Weight:	Approx 210 kg

Features

CT 1403.25

- Finger touch activation
- Can salt/spice 3 fillets at the time
- Salt/spice only on fillets
- Can be set to salt/spice only thickest part of fillet
- Limited waste

Features

CT 1403.30

- Sensor activation
- Can salt/spice 2 fillets at the time
- Salt/spice in full width of the lane
- Even amount of salt/spice on all of the fillets
- Surplus salt/spice can be collected under wirebelt
- Optimum for salt/sugar mixtures

Salmon processing solutions

Marel's expertise and experience in designing and manufacturing advanced processing solutions is unmatched in the industry. Virtually a one stop shop for salmon processors, we offer everything from single stand-alone units to custom-designed turnkey solutions, including a wide range of key products for wet processing and value-adding slicing.

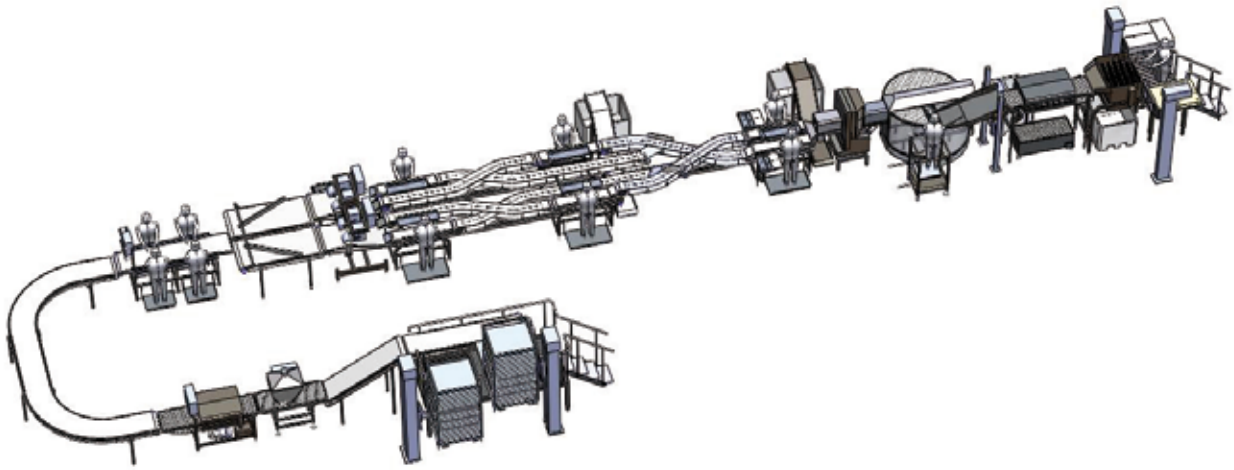

Our consultants work side-by-side with our customers to identify the best possible solution to meet their needs, providing advice and support throughout the entire process. First and foremost, our goal is to increase the productivity of our customers.

Marel

The leading global provider of advanced equipment and systems for the fish, meat and poultry industries.

Marel, Stork Poultry Processing and Townsend Further Processing – Our brands are among the most respected in the fish, meat and poultry processing industries. Together, we offer the convenience of a single source to meet our customers' every need.

For further information please visit
www.marel.com

Subject to change without notice/712.10/Dry salting/eng/January 2012