Salmon Deheading

High performance automatic deheading

- Optimized work flow
- High yield
- Reduced labour costs
- Suitable for salmon between 2 and 7 kg
- Easy to operate

Automatic Deheading

High precision for optimum yield

The deheading is one of the important processes in salmon processing where the yield is depending on how efficient the work is done. To gain the optimum yield you need a high and constant level of precision during the process.

The automatic deheading machine CT 2620 from Marel is built with focus on these objectives. Compared to manual deheading the CT 2620 can perform at a high level over a long period of time without reducing the capacity.

The Marel deheader will reduce the need for manpower significantly as it is carrying out several tasks in a rotating principle. When the salmon is feeded in to the machine - it just takes one push on the start button and the salmon is automatic deheaded, tailcutted and delivered in to the filleting machine.

All it takes is one operator to feed the machine. Heads and tail are automatically collected beneath the machine, and can be distributed in different ways. A conveyor belt for the heads and tails can be delivered with the deheader.

The CT 2620 deheading machine makes a uniform cut, and the machine is capable of handling up to 15 fish per minute. Operating the machine is easy, and there are just a few adjustments to make when you go from one fish size to another.

Lower operation costs

The operation costs are reduced due to the automation of the whole process, and overall yield is optimized due to better control of deheading, tail cut and improved filleting.

The workflow - step by step

The CT 2620 is based on a rotating principle where the salmon is going through 4 steps and delivered automatically in to the filleting machine.

1

The infeed

The salmon is inserted in to the input carriage by the operator securing that the fish is placed in the right position.

2

The deheading

During a 90 degrees rotation the neck of the fish is cut, and immediately after deheaded by a guillotine knife.

3

The tailcutting

After the next rotation the fish is pulled back until a sensor detects the tail. During the next rotation a round knife is cutting off the tail.

4

The outfeed

The headless and tail-less fish is automatically inserted in to the filleting machine, and the carriage returns empty to begin the next cycle.

Technical data · CT 2620

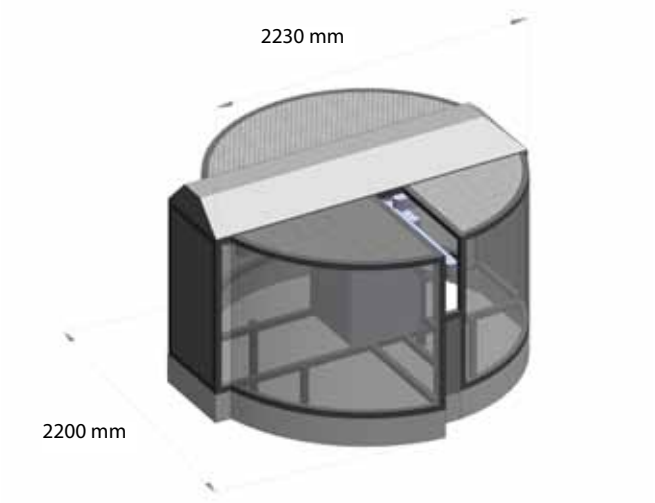

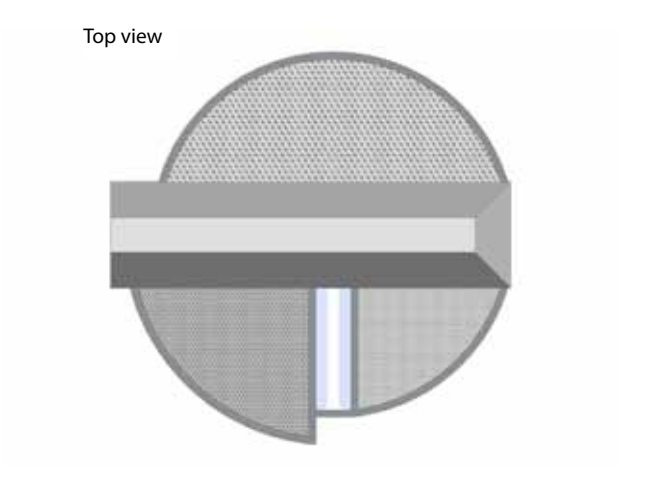

SPECIFICATIONS	
Capacity:	Up to 15 fish/min., fish size 2-7 kg
Electricity:	3 x 400 V + N + PE / 3x220V + PE
Power consumption:	3 kW
Compressed air:	10l/min. at 7-8 bar pressure,
Weight:	650 kg
The machine is designed in accordance with CE standards	

After sales service

Any purchase of a Marel deheading machine includes the offer of installation, to make sure you can quickly and smoothly get your production line up and running.

Our skilled service engineers will also provide your operators with thorough training in operating, cleaning and maintaining the equipment.

Our service department is always available to provide any troubleshooting and assistance you may need. This includes sending a service engineer to deal with any technical issues related to your Marel deheading set-up.

A Marel service agreement also gives you easy access to regular service support. Our service engineer will visit you to check the equipment thoroughly and make sure it is properly set up and fine-tuned for efficient, reliable production, changing any parts if necessary.

Whenever you need any wearing parts, spares or replacement parts, we dispatch these straight to you by courier service, to help ensure maximum uptime.

Features

- Reduced labour costs
- High yield
- Less handling
- Easy to operate
- Can be integrated with filleting machine CT 2630
- Optimized work flow
- Open design for easy access and efficient cleaning

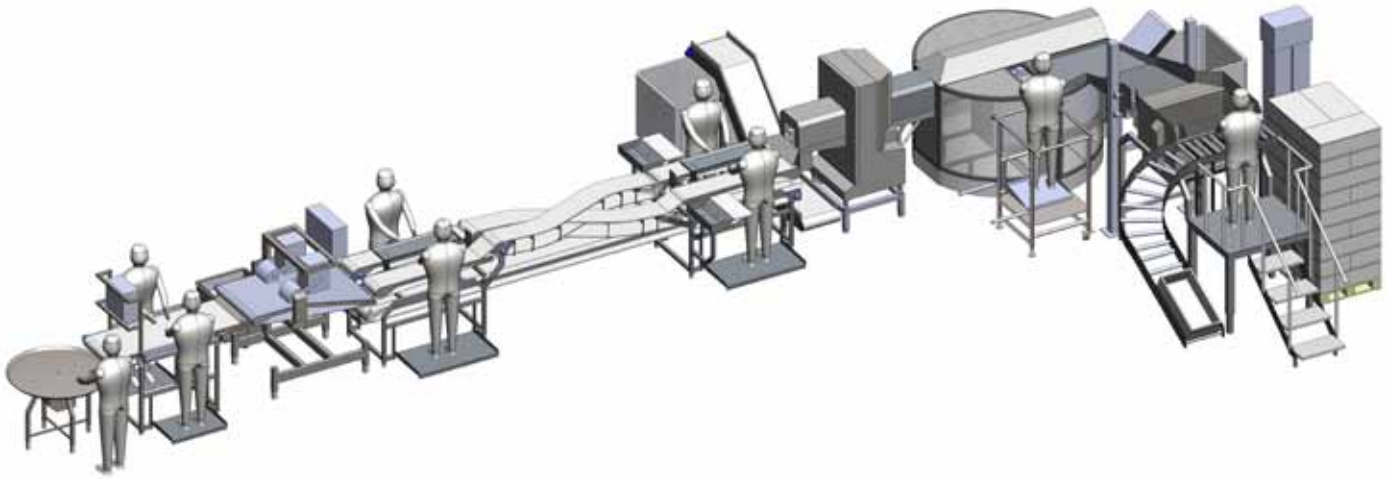

Integrated solution with filleting machine

The Marel deheader is designed to be fully integrated with the Marel filleting machine CT 2630 for optimum workflow. We can offer various solutions with equipment that can be used in connection with deheading and filleting customized to your demands and facilities.

Salmon processing solutions

Marel's expertise and experience in designing and manufacturing advanced processing solutions is unmatched in the industry. Virtually a one stop shop for salmon processors, we offer everything from single stand-alone units to custom-designed turnkey solutions, including a wide range of key products for wet processing and value-adding slicing.

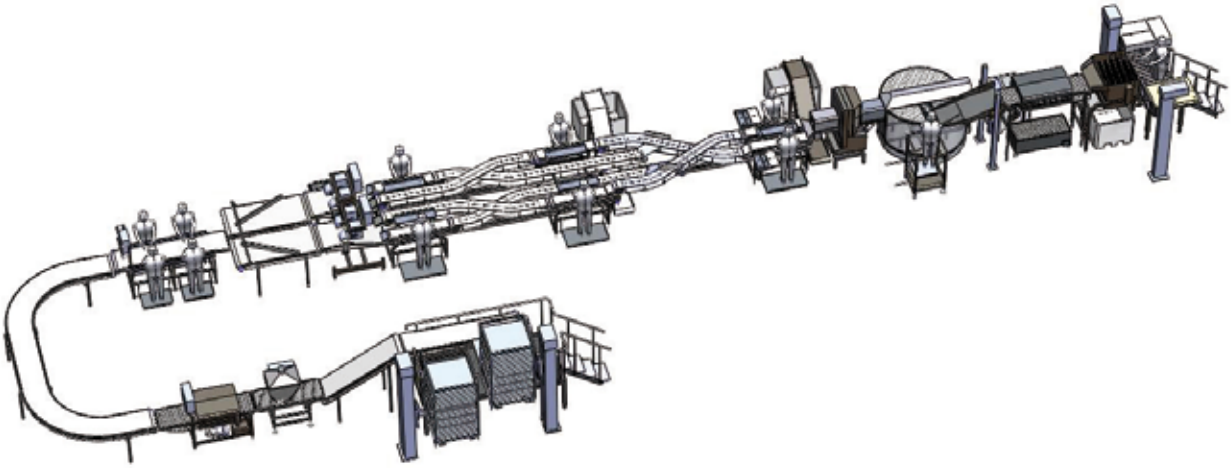

Our consultants work side-by-side with our customers to identify the best possible solution to meet their needs, providing advice and support throughout the entire process. First and foremost, our goal is to increase the productivity of our customers.

Marel

The leading global provider of advanced equipment and systems for the fish, meat and poultry industries.

Marel, Stork Poultry Processing and Townsend Further Processing – Our brands are among the most respected in the fish, meat and poultry processing industries. Together, we offer the convenience of a single source to meet our customers' every need.

For further information please visit
www.marel.com

Subject to change without notice / 704.10/ Deheading / Eng / January 2012